SIZE SPECIFICATION - CUSTOM	**STYLE NO: IT328**	CUSTOMER: Nunawading Swim

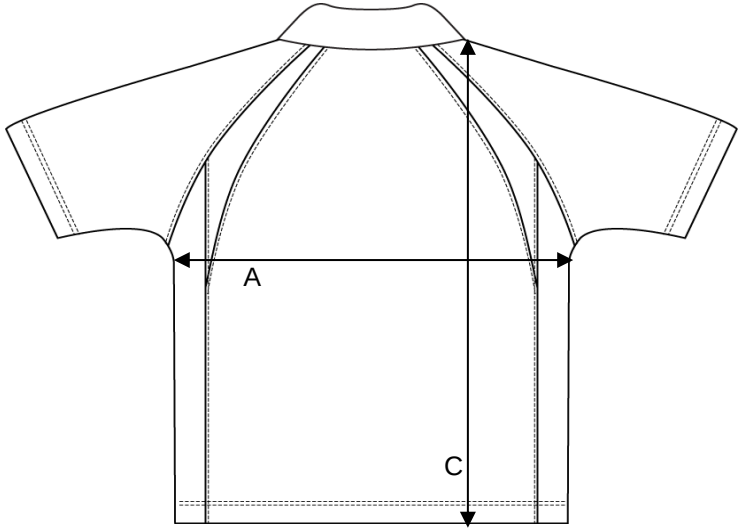

		CHILDS						ADULTS								
	POSITION		**8C**	**10C**	**12C**	**14Y**			**XS**	**S**	**M**	**L**	**XL**	**2XL**	**3XL**	
A	Chest		89	94	99	104			108	113	118	123	128	133	138	
C	Length - Side neck to Fr. hem		58	61.5	65	68.5			69.5	71.5	73.5	75.5	77.5	79.5	81.5	